LINEA S

The Compact Gantry for Aerospace



FIDIA



Numerical Control

Also available with **SIEMENS** CNC.

LINEA-S

AEROSPACE

Fidia presents **"LINEA"**, the new definition of 5-axis machine with linear motors, characterized by its dynamics and successful quality-performance-price ratio.

The modularity of the construction design allows for four sizes of X-axis travel, accompanied by a range of milling heads and dedicated accessories.

In continuous 5-axis machining, high dynamic capacity on all axes is essential.

For this purpose the **LINEA-S** offer:

- A dedicated A/C axis head, equipped with a 4-motor system to eliminate backlash.
- Linear motors on the XY axes ensure the highest acceleration performance.
- Dual kinematics on the Z axis.

All machines comply with European directives allowing to access to tax incentives.



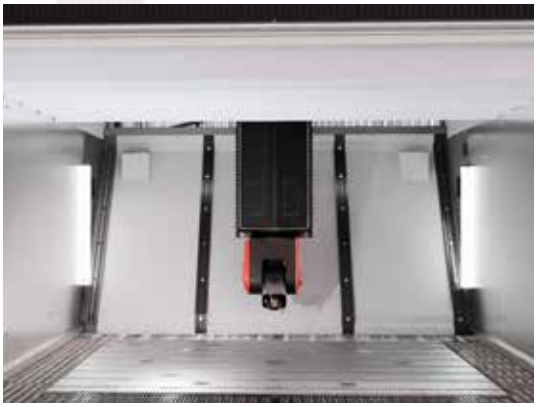

Layout

Fidia offers four versions of the **LINEA S**: **S3**, **S4**, **S6**, **S8**

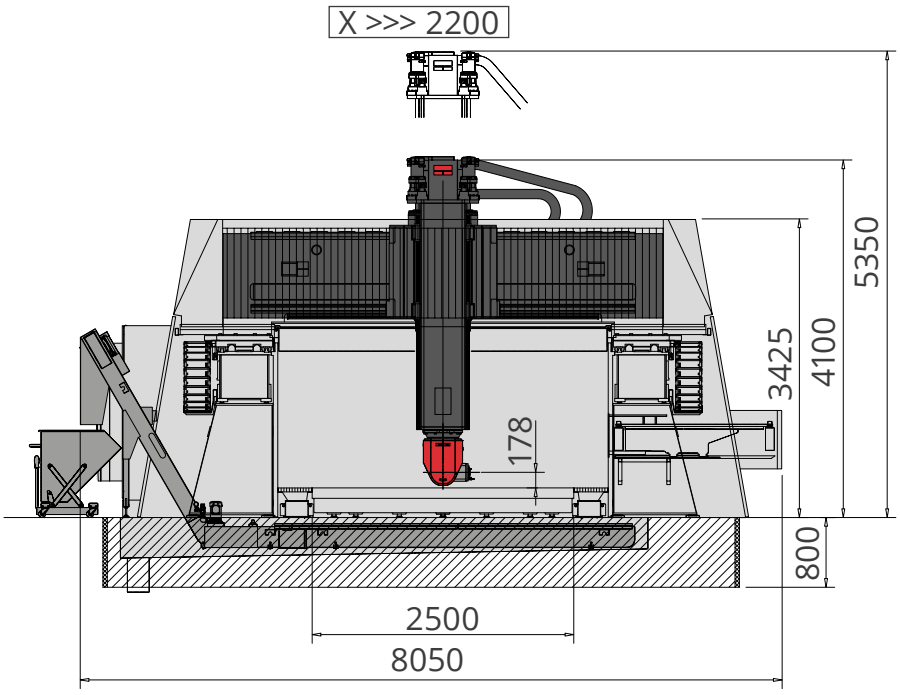

The **S** model, with its workpiece table made in cast iron, independent of the side walls and anchored to the foundation, offers the possibility to adjust the clearance under the head according to production needs.

		Linea S3	Linea S4	Linea S6	Linea S8
Axis	X	3000 mm (118”)	4500 mm (177”)	6200 mm (244”)	8200 mm (322”)
	Y	2200 mm (87”)	3000 mm (118”)	3000 mm (118”)	3000 mm (118”)
	Z	1200 mm (47”)	1200 mm (47”)	1200 mm (47”)	1200 mm (47”)
Max. speed	X/Y/Z	60/60/30 m/min			
Table size		2500 x 2000 mm	2500 x 4000 mm	2500 x 6000 mm	2500 x 8000 mm

Available Heads

M5S

± 110°; ± 360°

Spindle

24.000 1/min | 55 kW - HSK63A

30.000 1/min | 95 kW - HSK63A

15.000 1/min | 65 kW - HSK100A



Project Modularity
LINEA offers four sizes of X-axis travels, milling heads, and accessories for molds, aerospace, and composites.

Time Reduction
Reduced setup times for quick operational readiness.

Siemens CNC Available
Available with Siemens CNC “Sinumerik ONE” to meet specific requirements.

Engineering

RIGIDITY AND PRECISION,

IN EVERY CONFIGURATION.

LINEA S is available in four sizes: X=2.200 **(S3)**, X=4.500 **(S4)**, X=6.200 **(S6)** and X=8.200 **(S8)**, sharing the same upper gantry architecture, the same linear motor technology, and the same approach to thermal stability. The right size for every aero engineering shop, with no compromise on accuracy.

Direct Linear Motors on X and Y

No backlash, no wear. Axes performing the same regardless the years of use. Reduced maintenance of linear drive components.



60 m/min	4 m/s²	8.2 m	80 t
MAX AXIS SPEED X/Y	AXIS ACCELERATION	MAX X TRAVEL (S8)	MAX TABLE LOAD (S8)

Performance

FROM ALUMINUM ALLOYS TO STEEL TOOLING.

LINEA S applications range from production of bulkheads and other remarkable aerostructure components, to the hard tooling for lay-up of carbon fiber.

Available configurations include mill/turn operation with additional 6th axis turning table, and the use of wide range of angular head and accessories.



Steel

Tooling steel & exotic material for carbon fibre forming.

Titanium

High feed cutting for superior surface quality.

Aluminium

High-speed cutting at full 24,000 rpm.





Numerical control

FIDIA C20, DESIGNED FOR POWER.

High-end CNC designed to execute complex high-speed 5-axis machining processes, capable of managing milling systems with more than 6 axes. Management of special applications such as: head change, pallet change, etc.



Adaptive Control

Feed rate adjusts continuously to real cutting load. Maximum removal rate; spindle and tools always protected.

High level performance for 5-axis machining

- 19 “TFT LCD monitor, touch screen;
- 64-bit PowerPC CPU (axis management, PLC, etc.);
- Tandem, Gantry, Synchronous, Multiple axis management...;
- Volumetric axis calibration: VAC & HMS;
- Tool setting;
- Measurement, comparison and 3D alignment of the piece;
- RTCP & Virtual Axis & Inclined planes;
- Integrated CAD / CAM: Isograph & Hi-Mill;
- High Speed Machining;
- High performing look ahead V6.

Modularity

CONFIGURED AROUND
YOUR PROCESS.

Every option is designed to integrate without compromise.

Tool magazines

HSK-A63 & HSK-A100 — Chain and Swap-Arm Versions

- Up to multiple **60 positions** chain type
- Up to multiple **100 positions** swap-arm type

Coolant & Chips

Chip Conveyors, Filtering Tanks, Coolant Systems

- Scraper chip conveyors: 1, 2 or 3 units
- Belt chip conveyors: 1, 2 or 3 units
- Low-pressure paper filtering tank - 1,000 L
- High-pressure paper filtering tank - 1,000 L
- High-pressure self-cleaning filtering tank
- Low-pressure self-cleaning filtering tank
- Extended coolant tank: up to 2,000 L
- Oil skimmer for coolant maintenance
- High-flow washing system - 300 L/min
- Through-spindle air blow or air/oil mist

Measurement

In-Process Probing, Tool Presetting, Form Inspection

- Renishaw and M&H radio probe systems
- In-process inspection available
- Automatic tool laser presetting
- Balluf tool data management
- Tool life management

Environment

Enclosures and mist collector

- Operating volume cover - Sky-Wave system
- Mist collector - up to 8,000 m^3/h HEPA

Monitoring

Machine Monitoring, Remote Control, Operator Tools

- FIDIA Machine Monitoring System
- 4-camera video monitoring system
- Remote control software
- Portable pushbutton panel with display
- CNC panel on articulated arm
- Machine status signal column
- Extra light under traverse
- Vibration monitoring system

FIDIA S.p.A.
Strada del Drosso, 29/15
10135 Torino - TO - ITALY
Tel. +39 011 2227111
info@fidia.it
www.fidia.it

EN - 26/11

FIDIA GmbH
Robert-Bosch-Strasse 18
63303 Dreieich-Sprendlingen - GERMANY
Tel. +49 6103 4858700
Fax +49 6103 4858777
info@fidia.de

FIDIA Co.
1115 E Whitcomb Ave.
Madison Heights, MI 48701 - USA
Tel. +1 248 6800700
Fax +1 248 6800135
info@fidia.com

FIDIA Sarl
47 bis, Avenue de l'Europe
B.P. 3 - Emerainville
77313 Marne La Vallee Cedex 2 - FRANCE
Tel. +33 1 64616824
Fax +33 1 64616794
info@fidia.fr

FIDIA Iberica S.A.
Parque Tecnológico
Laida Bidea, Edificio 208
48170 Zamudio - Bizkaia - SPAIN
Tel. +34 94 4209820
Fax +34 94 4209825
info@fidia.es

FIDIA DO BRASIL LTDA
Av. Capitão Casa, 312 - Dos Casas
São Bernardo do Campo
09811-250 - SP - BRASIL
Tel. +55 11 3996-2925
info@fidia.com.br

FIDIA JVE
Beijing Fidia Machinery & Electronics Co., Ltd
Room 2901-02B, 29/F Tower A.
TYG Center Mansion
C2 North Road East Third Ring Road,
Chaoyang District - 100027 BEIJING - P.R. CHINA
Tel. +86 10 64605813/4/5
Fax +86 10 64605812
info@fidia.com.cn

Service centres:

FIDIA GmbH - SERVICE CZ
CZ- 74706 Opava
Tel/Fax +420 553 654 402
sales.cz@fidia.it

3H MAKINA
Atasehir Bulvari, Ata 2/3
Plaza, Kat: 3 No: 34
Atasehir - Istanbul - TURKEY
Tel.: +90 216 456 10 43
Fax: +90 216 456 75 23
sales.tr@fidia.it
service.tr@fidia.it

AXIS SYSTEMS
T8 ~ T9 ~ T20, "INSPIRIA"
Old Mumbai - Pune Highway,
Pune – 411044, India
Cell : +91 9881245460
service.in@fidia.it

P.V. ELECTRONIC SERVICES C.C.
P.O. Box 96
Hunters Retreat 6017
Port Elisabeth SOUTH AFRICA
Tel. +27 41 3715143
Fax +27 41 3715143
sales.za@fidia.it

IE-MAT s.r.l.
Bv. De Los Calabreses 3706
Barrio: Boulevares.
Córdoba - ARGENTINA
CP: X5022EWW
Tel. +54 351 5891717
sales.ar@fidia.it

Manufacturing plants:

FIDIA S.p.A.
Via Balzella, 76
47100 Forlì
ITALY
Tel. +39 0543 770511
Fax +39 0543 795573
info@fidia.it

ISO 9001
Quality

COPYRIGHT 2026 © FIDIA S.p.A.
Torino, Italy
The products described in this catalogue may be subject
to technical updates without prior information.