Go5

5-Axis High-Speed Milling Center



FIDIA



Fidia Go5

The **FIDIA Go5** is a high-speed milling center with a fixed gantry and moving table configuration, designed to maximize rigidity in a compact footprint. The structure is made entirely of cast iron castings, a choice that ensures thermal stability and high vibration damping during all machining operations. The design is distinguished by the 45° inclined base, a technical solution that optimizes the integration of the tilting rotary table and facilitates the natural fall of chips toward the evacuation system.

- **Accessibility**: Two large sliding doors allow front and side loading of workpieces.
- **Installation**: Thanks to the structural rigidity, the machine does not require special foundations.
- **Chip management**: Integrated system with frot auger and rear conveyor as standard.



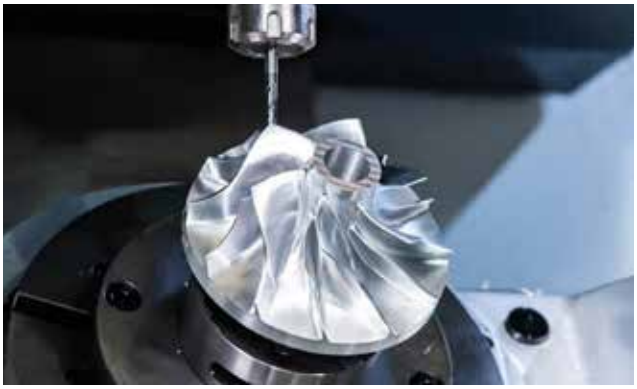

Layout

Compact design

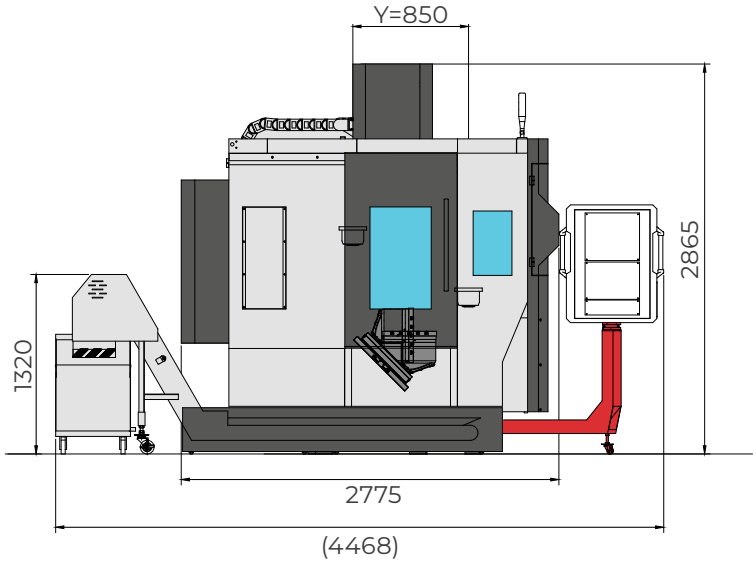

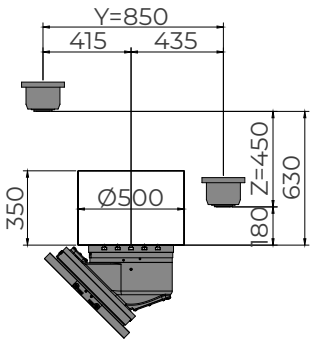

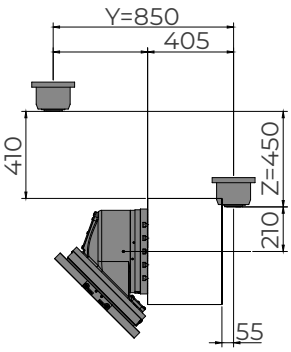

The **Go5** allows the machine to be installed in workshops with optimized spaces, while ensuring generous working strokes.

The self-supporting monoblock structure, with an overall weight of approximately 8,000 kg, ensures high stability and simplifies positioning and commissioning operations.

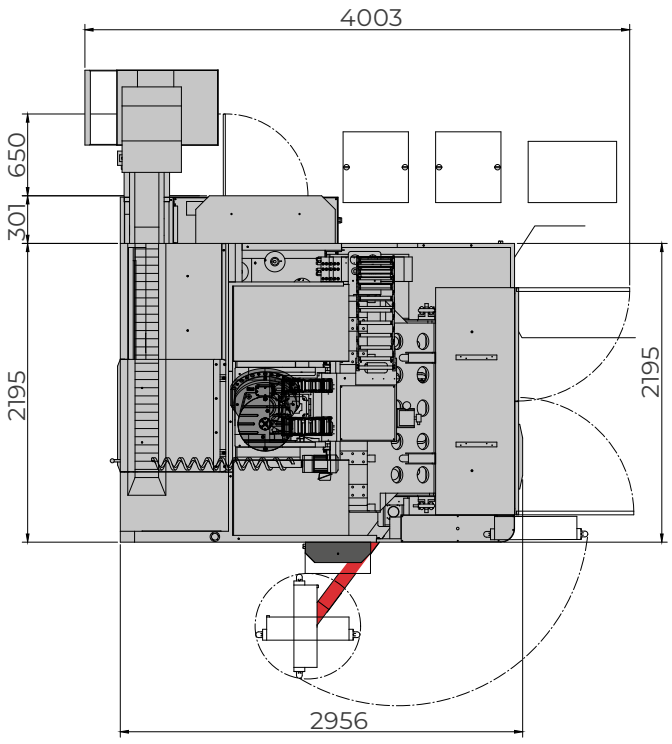

Axis strokes	**X**	**Y**	**Z**
	600 mm (23.6”)	850 mm (33.5”)	450 mm (18”)
Axis speed		30 m/min	
B - Tilting (Table)		+/- 180°	
C - Rotary (Table)		360° (continuo)	
Table			
Table plate diameter		Ø 400 (15.7”)	
Max. load capacity		300 kg. (660 lb)	

The Structure

The robustness of the monoblock

The **Go5** follows a construction philosophy that prioritizes maximum dynamic stability. The structure consists of a fixed gantry architecture with a moving table, made entirely of high-quality heavy cast iron castings.

This choice is dictated not only by robustness, but by the need to ensure high damping of the vibrations typical of high-speed machining. In addition to superior thermal stability, it minimizes geometric drift during prolonged work cycles. The design concentrates the masses at the points of greatest stress, ensuring maximum rigidity in all machining operations, including the most demanding ones.

The 45° inclined base configuration acts as a load-bearing column for the entire unit, distributing weights in a balanced manner and offering torsional rigidity that translates into precision across the entire working volume.

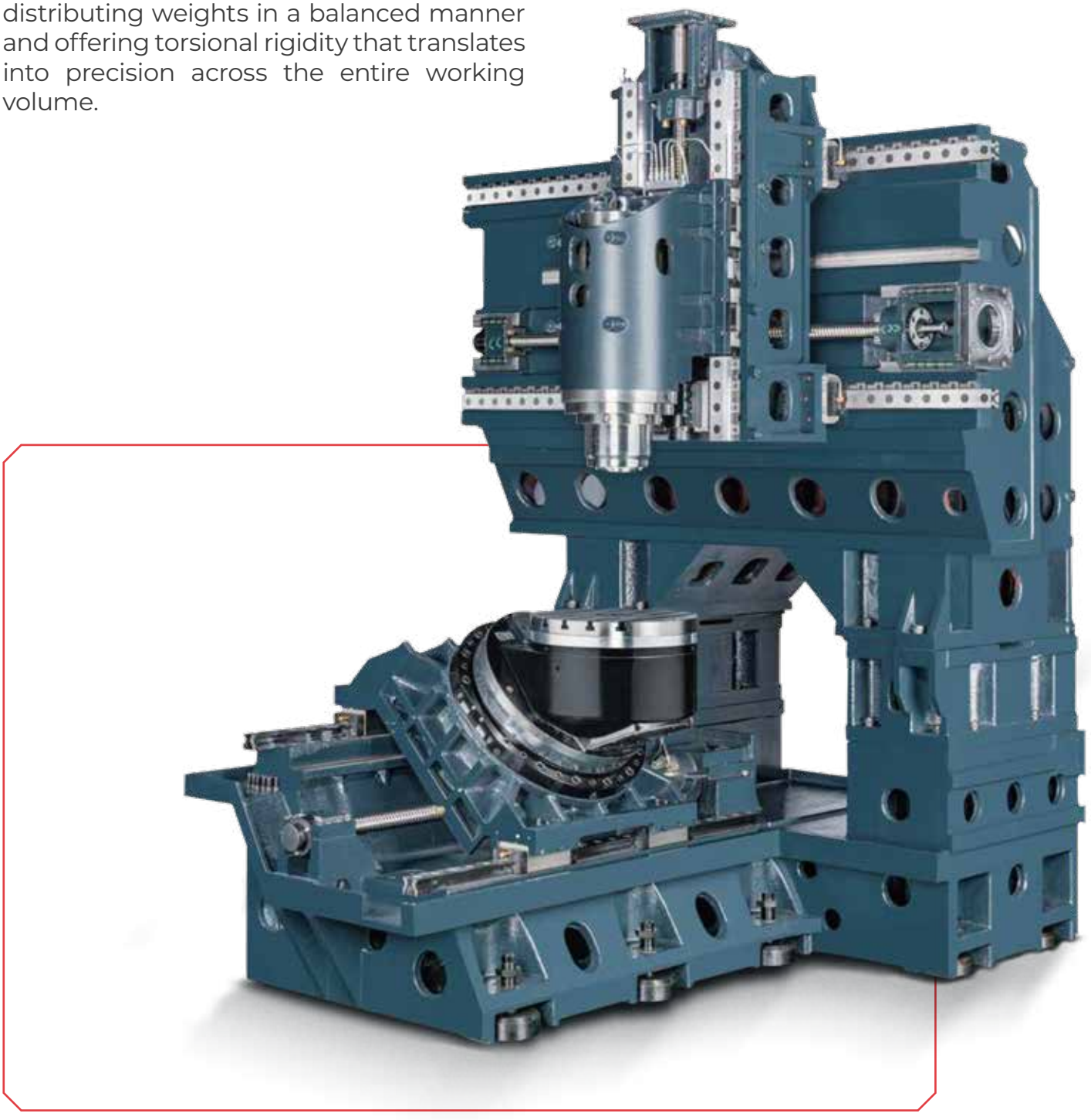

Plug & Play Installation

The **Go5** is designed for an easy installation. Thanks to the rigidity of the cast iron mono block, the machine does not require special foundations, allowing quick installation on normal good-quality industrial floors.

The self-supporting structure allows future relocations and lifting without altering geometric alignments or original precision.





Automation

The machine may be configured with different pallet handling systems, with 6 -8 or 14 pallets and various clamping standards. Automation is key to extend the machine's working hours and make quicker return of investment.





Milling unit

Performance and Precision

The machine has been designed to accommodate two different types of spindle, allowing the machining center to be configured according to specific production requirements, from high-speed roughing to ultra-high-precision finishing.

Each spindle is supported by a closed-circuit cooling system that stabilizes the temperatures of the bearings and windings.

	M3A/20-18	M3A/19-36
Max. spindle speed	18.000 1/min	36.000 1/min
Max. Power (S1/S6)	11.7/20 kW	17/19.5 kW
Max. torque (S1/S6)	46/80 Nm	11/12.5 Nm
Toolholder	HSK-A63	HSK-E50

Both systems use minimal air/oil lubrication for the bearings, automatically managed to ensure maximum longevity of the rotating components even under conditions of continuous use at high speeds.



New nC19-24 Control

New **nC19-24** ACL enhanced numerical control.

A CNC that combines a high quality level with a compact design while benefiting from all Fidia technology including the new ACL adaptive logic.



Versatile and Compact

Designed to be extremely compact and versatile, it features a physical keyboard and a newly conceived control panel that enhance usability and ergonomics, along with an 18.5” wide full HD P-CAP multi-touch screen.

A product designed to equip the Fidia range but not only, in fact its versatility and ease of use make it very suitable for retrofit operations on existing machines or as a CNC for OEM machine builders who want to offer a product with an excellent quality/price ratio on the market..

Low energy consumption design



Superior Performance

The ACL (Adaptive Control Logic) allows superior class performance, increasing machine performance by over 30% during roughing phases and optimizing tool life. Standard features include the CRS (Chattering Reduction System) function for chattering reduction and the ability to leverage ACL logic for controlling non-standard production variables, CPM (Custom Parameters Management).

FIDIA S.p.A.
Strada del Drosso, 29/15
10135 Torino - TO - ITALY
Tel. +39 011 2227111
info@fidia.it
www.fidia.it

FIDIA GmbH
Robert-Bosch-Strasse 18
63303 Dreieich-Sprendlingen - GERMANY
Tel. +49 6103 4858700
Fax +49 6103 4858777
info@fidia.de

FIDIA Co.
1115 E Whitcomb Ave.
Madison Heights, MI 48701 - USA
Tel. +1 248 6800700
Fax +1 248 6800135
info@fidia.com

FIDIA Sarl
47 bis, Avenue de l'Europe
B.P. 3 - Emerainville
77313 Marne La Vallee Cedex 2 - FRANCE
Tel. +33 1 64616824
Fax +33 1 64616794
info@fidia.fr

FIDIA Iberica S.A.
Parque Tecnológico
Laida Bidea, Edificio 208
48170 Zamudio - Bizkaia - SPAIN
Tel. +34 94 4209820
Fax +34 94 4209825
info@fidia.es

FIDIA DO BRASIL LTDA
Av. Capitão Casa, 312 - Dos Casas
São Bernardo do Campo
09811-250 - SP - BRASIL
Tel. +55 11 3996-2925
info@fidia.com.br

FIDIA JVE
Beijing Fidia Machinery & Electronics Co., Ltd
Room 2901-02B, 29/F Tower A.
TYG Center Mansion
C2 North Road East Third Ring Road,
Chaoyang District - 100027 BEIJING - P.R.
CHINA
Tel. +86 10 64605813/4/5
Fax +86 10 64605812
info@fidia.com.cn

Service centres:

FIDIA GmbH - SERVICE CZ
CZ- 74706 Opava
Tel/Fax +420 553 654 402
sales.cz@fidia.it

3H MAKINA
Atasehir Bulvari, Ata 2/3
Plaza, Kat: 3 No: 34
Atasehir - Istanbul - TURKEY
Tel.: +90 216 456 10 43
Fax: +90 216 456 75 23
sales.tr@fidia.it
service.tr@fidia.it

AXIS SYSTEMS
T8 ~ T9 ~ T20, "INSPIRIA"
Old Mumbai - Pune Highway,
Pune – 411044, India
Cell : +91 9881245460
service.in@fidia.it

P.V. ELECTRONIC SERVICES C.C.
P.O. Box 96
Hunters Retreat 6017
Port Elisabeth SOUTH AFRICA
Tel. +27 41 3715143
Fax +27 41 3715143
sales.za@fidia.it

IE-MAT s.r.l.
Bv. De Los Calabreses 3706
Barrio: Boulevares.
Córdoba - ARGENTINA
CP: X5022EWW
Tel. +54 351 5891717
sales.ar@fidia.it

Manufacturing plants:

FIDIA S.p.A.
Via Balzella, 76
47100 Forlì
ITALY
Tel. +39 0543 770511
Fax +39 0543 795573
info@fidia.it

COPYRIGHT 2026 © FIDIA S.p.A.
Torino, Italy
The products described in this catalog may be subject to technical updates without prior notice.